KONICA MINOLTA

Spectrophotometer
CM-700d/600d

17

Compact, lightweight, portable spectrophotometer with wireless communication and color LCD screen

Field-oriented spectrophotometer for reliable color measurement

Unprecedented ease of handling and
easy operation with color LCD screen

The Standard in Measuring Color & Light

Giving Shape to Ideas

CM-700d/600d: Compact, lightweight spectrophotometers with wireless communication and color LCD screen, offering excellent portability and operability!

We are surrounded by abundant colors. In the automotive, home appliance, portable phone, textile and clothing industries the variation in colors are increasing in order to differentiate products. In the food industry, the importance of color management continues to rise. Under such circumstances, the applications of color-measuring instruments have been rapidly spreading from R&D or QC departments to production sites, as well as from product manufacturers to parts/material suppliers.
The CM-700d/600d is a spectrophotometer that has achieved a much more compact and lightweight body while retaining the sophisticated functions of Konica Minolta's conventional models by utilizing our original optical design and signal processing technologies. It allows easy and accurate color measurement in various sites and occasions.
The easy-to-read color LCD screen allows intuitive recognition of measurement results.
Experience the ease for yourself!

Perfect design to fit in your hand

- Ergonomic, compact and lightweight
- Vertical format for easy positioning
- Excellent portability for production sites

Measure anywhere!

The tapered measuring head allows for easy checking of measurement positions. The upright design ensures easy measurement, even on concave surfaces. The measuring aperture is selectable between ø8 mm and ø3 mm according to the sample size (CM-700d only).

Bluetooth® compatible!

Data can be sent to a PC or a mobile printer via Bluetooth® wireless communication. (USB communication with a PC is also possible.)

Automatic switching for SCI and SCE measurement

Large memory capacity

No. of storable data sets
Target data: 1,000 sets
Measurement data: 4,000 sets

Easy to operate!

Dedicated buttons for frequently used operations make it easy to call up menus or target colors. The menu-driven display allows anyone to operate the instrument intuitively.

Easy-to-read color LCD screen!

Abundant information is displayed in color for easy understanding. Measured colors can also be reproduced as color patches on the color LCD, which is useful to check the level of color difference or to search for colors.

Spectral graph

Pseudocolor

Color difference graph

Color Data Software SpectraMagic™ *NX* CM-S100w

(Optional accessory)

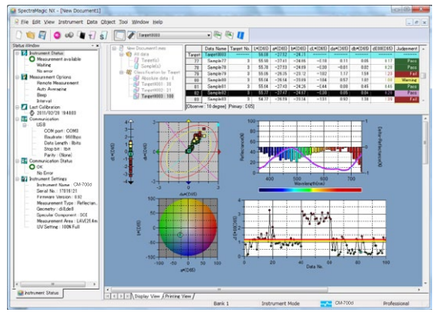

Screen creation according to the application

You can create screens suitable for your application by laying out and editing various objects including data lists, spectral graphs, color difference graphs and Pass/Fail displays. You can also create print screens to print inspection reports after measurements.

OS: Windows® Vista Business 32 bit, 64 bit; Windows® 7 Professional 32 bit, 64 bit; Windows® 8.1 Pro 32 bit, 64 bit; Windows® 10 Pro 32 bit, 64 bit

• The hardware of the computer system to be used must meet or exceed the greater of the recommended system requirements for the compatible OS being used or the following specifications.

CPU: Pentium® III 600 MHz equivalent or faster **Memory:** 128 MB or more (256 MB or more recommended)
Hard disk: 450 MB or more of free space for installation **Display: Resolution:** 1,024 x 768 dots or more/ 16-bit colors or more
Other: DVD-ROM drive (required for installation); one free USB port for protection key; one free port (serial port or additional USB port) for connection to instrument when connecting via cable (or USB port for USB Bluetooth® adapter when using a USB Bluetooth® adapter for performing communication with CM-700d or CM-600d via Bluetooth®); Internet Explorer Version. 5.01 or later.

• Windows® is a trademark or registered trademark of Microsoft Corporation in the USA and other countries.
• Pentium® is a trademark of Intel Corporation in the USA and other countries.
• The specifications given here are subject to change without prior notice.
• Bluetooth® is a registered trademark of Bluetooth SIG, Inc. and is used under license agreement.

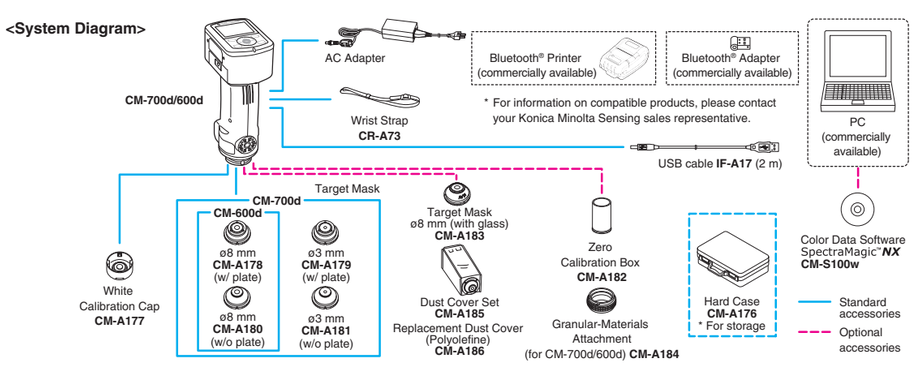

Standard accessories

Target Masks

ø8 mm (w/ plate)

ø8 mm (w/o plate)

ø3 mm (w/ plate)

ø3 mm (w/o plate)

White Calibration Cap

Optional accessories

Zero Calibration Box

Dust Cover Set

Target Mask ø8 mm (with glass)

Main specifications

Model	CM-700d	CM-600d
Illumination/ viewing system	di: 8°, de: 8° (diffused illumination, 8-degree viewing angle), SCI (specular component included)/SCE (specular component excluded) selectable with automatic switching (Conforms to CIE No. 15, ISO 7724/1, DIN5033 Teil 7, ASTM E 1164, and JIS Z 8722)	
Integrating sphere size	ø40 mm	
Detector	Silicon photodiode array (dual 36-element)	
Spectral separation device	Diffraction grating	
Wavelength range	400 nm to 700 nm	
Wavelength pitch	10 nm	
Half bandwidth	Approx. 10 nm	
Reflectance range	0 to 175%, Display resolution: 0.01%	
Light source	Pulsed xenon lamp (with UV cut filter)	
Measurement time	Approx. 1 second	
Minimum measurement interval	Approx. 2 seconds (in SCI or SCE mode)	
Battery performance	With alkaline dry batteries: Approx. 2,000 measurements * Stand-alone continuous measurement fixed to either SCI or SCE mode at 10-second intervals at 23°C	
Measurement/ illumination area	MAV: ø8 mm/ ø11 mm SAV: ø3 mm/ ø6 mm * Changeable by replacing target mask and selecting lens position	MAV: ø8 mm/ ø11 mm only
Repeatability	Spectral reflectance: Standard deviation within 0.1%, Chromaticity value: Standard deviation within ΔE^*_{ab} 0.04 (When a white calibration plate is measured 30 times at 10-second intervals after white calibration)	
Inter-instrument agreement	Within ΔE^*_{ab} 0.2 (MAV/SCI) * Based on 12 BCRA Series II color tiles compared to values measured with a master body at 23°C	
No. of averaging measurements	1 to 10 (Auto averaging), 1 to 30 (Manual averaging)	
Display	2.36-inch TFT color LCD	
Interface	USB1.1; Bluetooth® standard version 2.1+EDR*	
Observer	2° or 10° Standard Observer	
Illuminant	A, C, D_{50}, D_{65}, F_2, F_6, F_7, F_8, F_{10}, F_{11}, F_{12} (Simultaneous evaluation with two light sources possible)	
Displayed data	Spectral values/graph, colorimetric values, color difference values/graph, PASS/FAIL result, pseudocolor, color assessment	
Colorimetric data	L*a*b*, L*C*h, Hunter Lab, Yxy, XYZ, Munsell, and color difference in these spaces (except for Munsell)	
Index	MI, WI(ASTM E313-73/E313-96), YI(ASTM E313-73/ASTM D1925), ISO Brightness, 8° gloss value	
Color difference formulas	ΔE^*_{ab} (CIE 1976), ΔE^*_{94} (CIE 1994), ΔE_{00} (CIE DE2000), CMC (l: c), Hunter ΔE	
Data memory	Measurement data: 4,000 sets/Target color difference data: 1,000 sets	
Pass/Fail judgment	Tolerances can be set to colorimetric values (excluding Munsell), color difference values, color values (excluding 8° gloss value) respectively	
Power	Special AC Adapter; 4 AA-size alkaline dry batteries or nickel-metal-hydride rechargeable batteries	
Size (W x H x D)	73 x 211.5 x 107 mm	
Weight	Approx. 550 g (without white calibration cap and batteries)	
Operation temperature/ humidity range	5 to 40°C, relative humidity 80% or less (at 35°C) with no condensation	
Storage temperature/ humidity range	0 to 45°C, relative humidity 80% or less (at 35°C) with no condensation	

* Applicable Bluetooth® profile: Serial Port Profile, Output: Bluetooth® Power Class 1 The communication distance may vary depending on the obstacles and radio wave conditions between the devices. Successful wireless communication is not guaranteed with all Bluetooth®-ready equipment.

• Bluetooth® is a registered trademark of Bluetooth SIG, Inc. and is used under license agreement.

■ Dimensions (Units: mm)

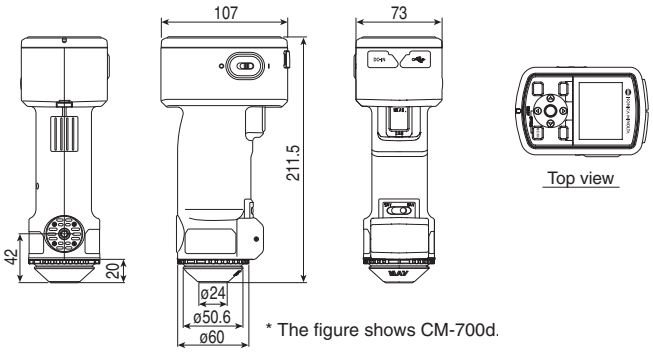

* The figure shows CM-700d.

SAFETY PRECAUTIONS

For correct use and for your safety, be sure to read the instruction manual before using the instrument.

- Always connect the instrument to the specified power supply voltage. Improper connection may cause a fire or electric shock.
- Be sure to use the specified batteries. Using improper batteries may cause a fire or electric shock.

• The specifications and appearance shown herein are subject to change without notice.
• If you have any questions about specifications, please contact your Konica Minolta representative.

Certificate No : LRQ 0960094/A
Registration Date : March 3, 1995

Certificate No : JQA-E-80027
Registration Date : March 12, 1997

KONICA MINOLTA, INC.	Osaka, Japan			
Konica Minolta Sensing Americas, Inc.	New Jersey, U.S.A.	**Phone :** 888-473-2656 (in USA), 201-236-4300 (outside USA)		**Fax :** 201-785-2482
Konica Minolta Sensing Europe B.V.	European Headquarter /BENELUX	Nieuwegein, Netherlands	**Phone :** +31(0)30 248-1193	**Fax :** +31(0)30 24 81 211
	German Office	München, Germany	**Phone :** +49(0)89 4357 156 0	**Fax :** +49(0)89 4357 156 99
	French Office	Roissy CDG, France	**Phone :** +33(0)1 80 11 10 70	**Fax :** +33(0)1 80 11 10 82
	UK Office	Warrington, United Kingdom	**Phone :** +44(0)1925 467300	**Fax :** +44(0)1925 711143
	Italian Office	Cinisello Balsamo, Italy	**Phone :** +39 02849488.00	**Fax :** +39 02849488.30
	Swiss Office	Dietikon, Switzerland	**Phone :** +41(0)43 322-9800	**Fax :** +41(0)43 322-9809
	Nordic Office	Västra Frölunda, Sweden	**Phone :** +46(0)31 7099464	
	Polish Office	Wroclaw, Poland	**Phone :** +48(0)71 73452-11	**Fax :** +48 (0)71 734 52 10
	Turkish Office	Istanbul, Turkey	**Phone :** +90 (0) 216-528 56 56	**Fax :** +90 (0) 212-253 49 69
Konica Minolta (CHINA) Investment Ltd.	SE Sales Division	Shanghai, China	**Phone :** +86-(0)21-5489 0202	**Fax :** +86-(0)21-5489 0005
	Beijing Office	Beijing, China	**Phone :** +86-(0)10-8522 1551	**Fax :** +86-(0)10-8522 1241
	Guangzhou Office	Guangdong, China	**Phone :** +86-(0)20-3826 4220	**Fax :** +86-(0)20-3826 4223
	Chongqing Office	Chongqing, China	**Phone :** +86-(0)23-6773 4988	**Fax :** +86-(0)23-6773 4799
	Qingdao Office	Shandong, China	**Phone :** +86-(0)532-8079 1871	**Fax :** +86-(0)532-8079 1873
	Wuhan Office	Hubei, China	**Phone :** +86-(0)27-8544 9942	**Fax :** +86-(0)27-8544 9991
Konica Minolta Sensing Singapore Pte Ltd.		Singapore	**Phone :** +65 6563-5533	**Fax :** +65 6560-9721
Konica Minolta Sensing Korea Co., Ltd.		Goyang-si, Korea	**Phone :** +82(0)2-523-9726	**Fax :** +82(0)31-995-6511

Addresses and telephone/fax numbers are subject to change without notice. For the latest contact information, please refer to the KONICA MINOLTA Worldwide Offices web page :

http://konicaminolta.com/instruments/network

©2007-2017 KONICA MINOLTA, INC.

9242-4894-10 BHDPK Printed in Japan